Lab 1 Report
Name: Tyler W. Grindrod
PID: 5695162

Date: 02/04/2026

1. Insert a screenshot of the Base Design.

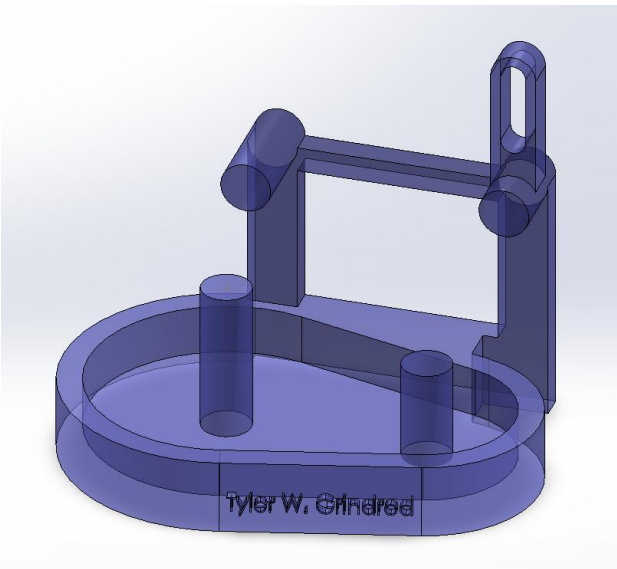

2. Insert a screenshot showing your name extruded out or cut in on front face of the Base

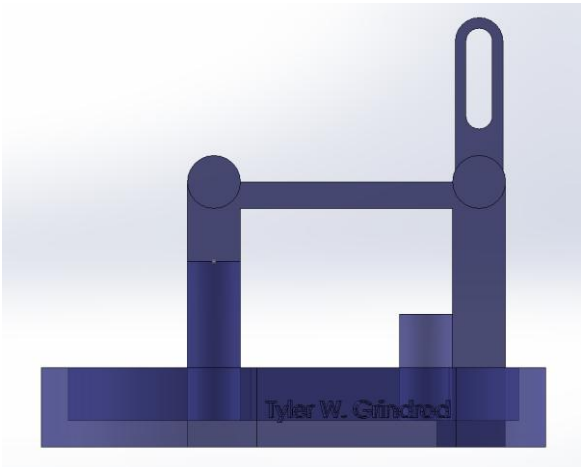

Lab 1 Report
Name: Tyler W. Grindrod
PID: 5695162

Date: 02/04/2026

3. Cam Design

a) Insert a screen shot of the cam Design showing with all relevant dimensions clearly shown.

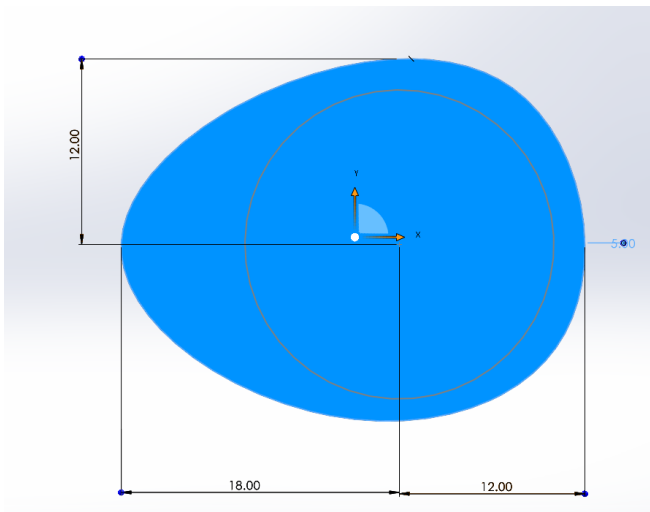

b) Insert a screen shot of the belt design

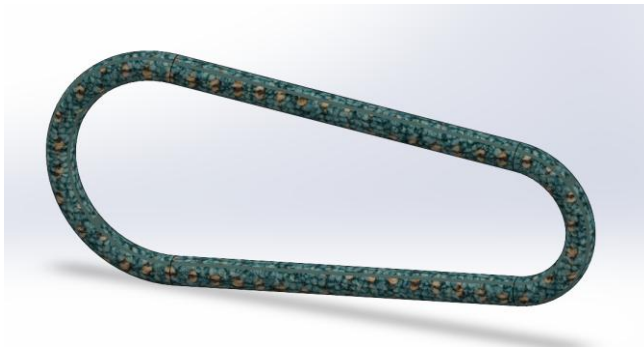

c) Insert a screenshot showing the base, cam, follower and the belt assembled together

Lab 1 Report
Name: Tyler W. Grindrod
PID: 5695162

Date: 02/04/2026

4. Insert a screenshot of the complete, fully assembled model, with all components properly mated and displayed in color.

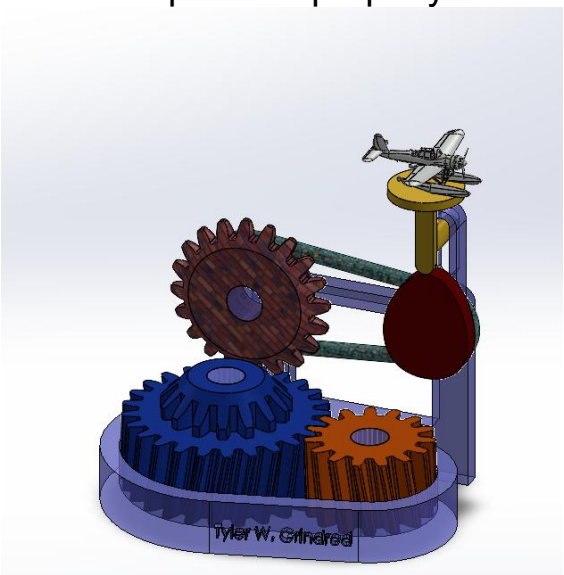

5. Insert Screenshot of the

    a) The Feature Tree, including sketches, extrudes, revolves, and other relevant features.

Lab 1 Report
Name: Tyler W. Grindrod
PID: 5695162

Date: 02/04/2026

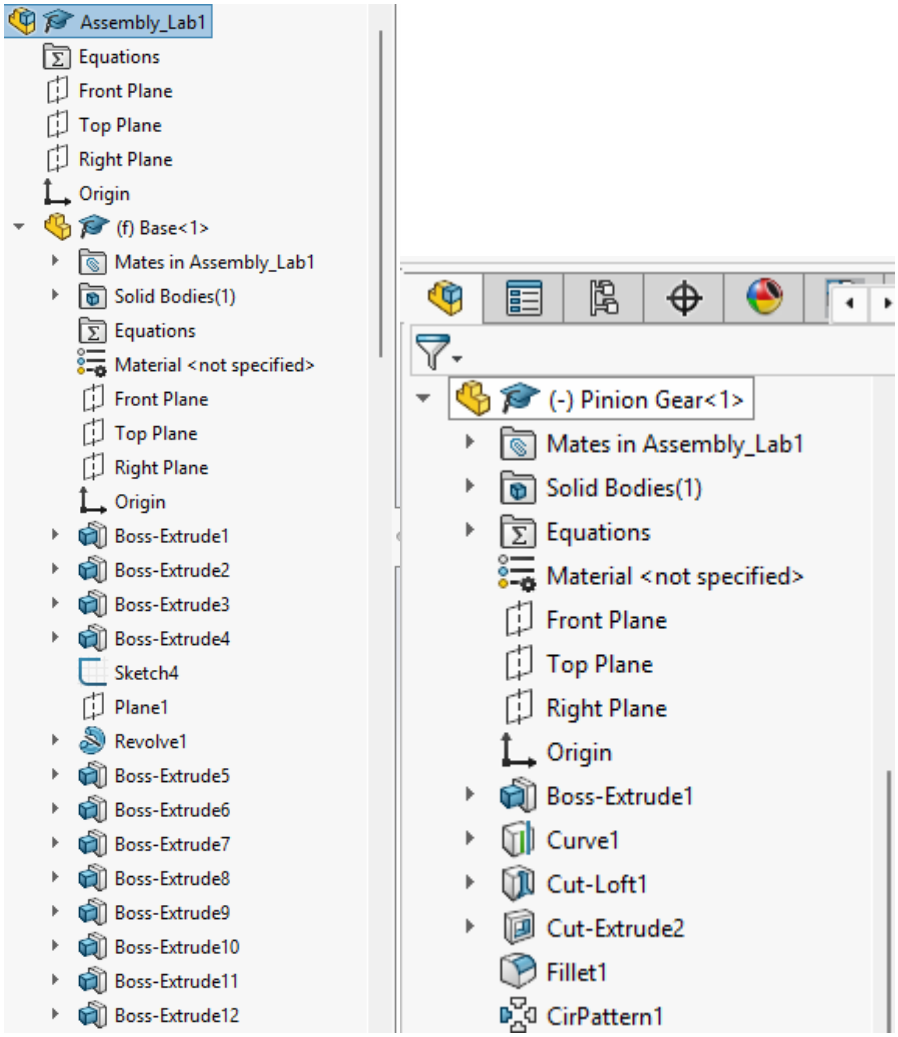

Lab 1 Report
Name: Tyler W. Grindrod
PID: 5695162

Date: 02/04/2026

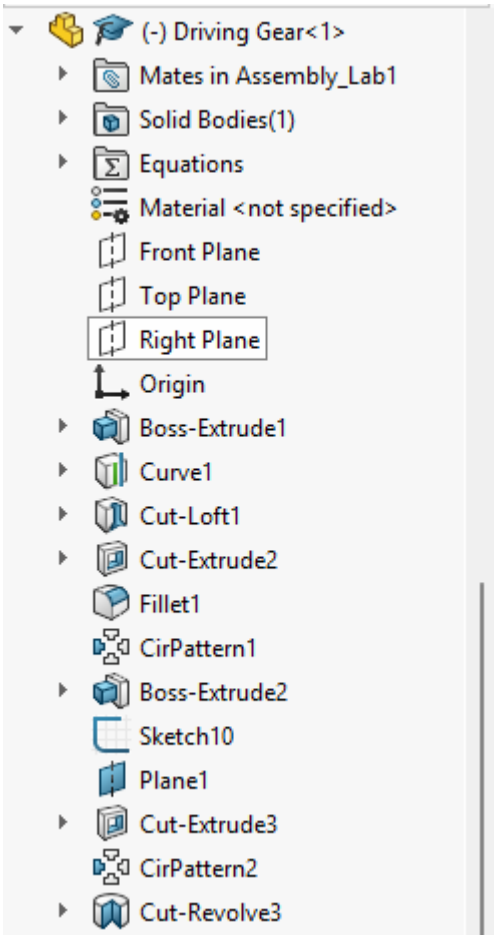

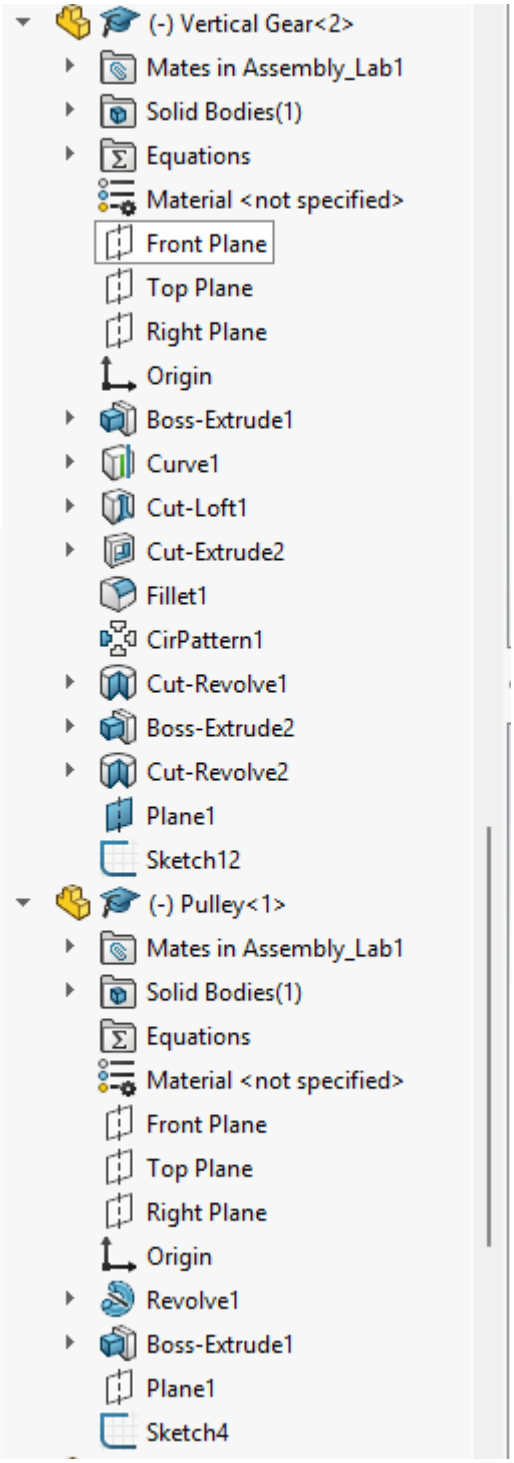

Lab 1 Report
Name: Tyler W. Grindrod
PID: 5695162

Date: 02/04/2026

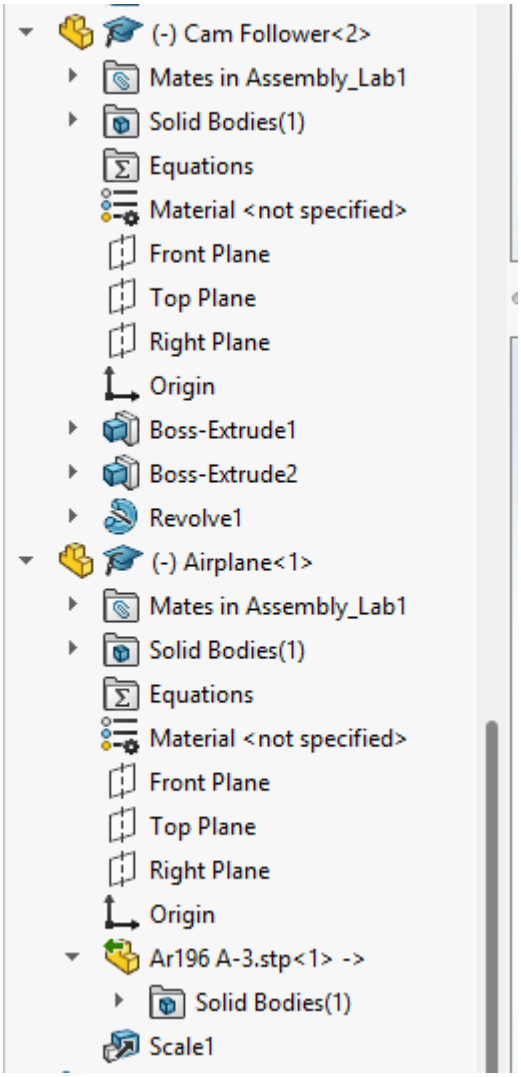

Lab 1 Report
Name: Tyler W. Grindrod
PID: 5695162

Date: 02/04/2026

b) The Material/Appearance Tree, showing assigned materials and appearances.

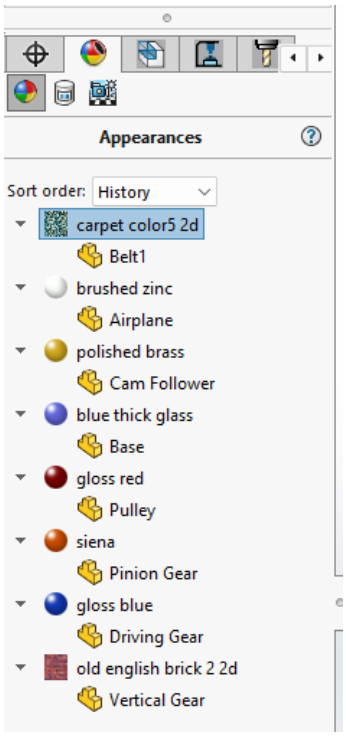

Lab 1 Report
Name: Tyler W. Grindrod
PID: 5695162

Date: 02/04/2026

6. Provide your calculations and justification for the angular velocity and direction of rotation of the pinion gear, such that the pulley cam assembly rotates at 27 RPM clockwise.

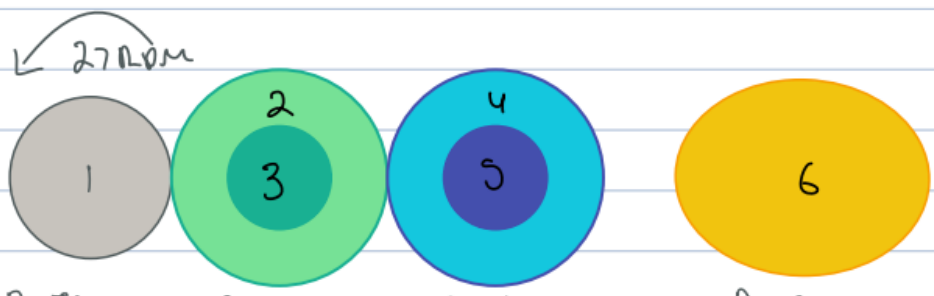

$D_1 = 30$ MM
$r_1 = 15$ MM

$D_2 = 50$ MM
$r_2 = 25$ MM
$D_3 = 30$ MM
$r_3 = 15$ MM

$D_4 = 40$ MM
$r_4 = 20$ MM
$D_5 = 30$ MM
$r_5 = 15$ MM

$D_6 = 20$ MM
$r_6 = 10$ MM

$$N_{i+1} = \frac{r_i}{r_{i+1}}$$

$N_{12} = r_1/r_2 = 15/25 = 0.6$
$N_{34} = 15/20 = 0.75$
$N_{56} = 15/10 = 1.5$

$N_T = N_{12} * N_{34} * N_{56} = 0.6 + 0.75 + 1.5 = 0.675$

$\omega_{out} = N_T * \omega_{in} \rightarrow \frac{27 \text{ RPM}}{0.675} = 40 \text{ RPM}$ Solution